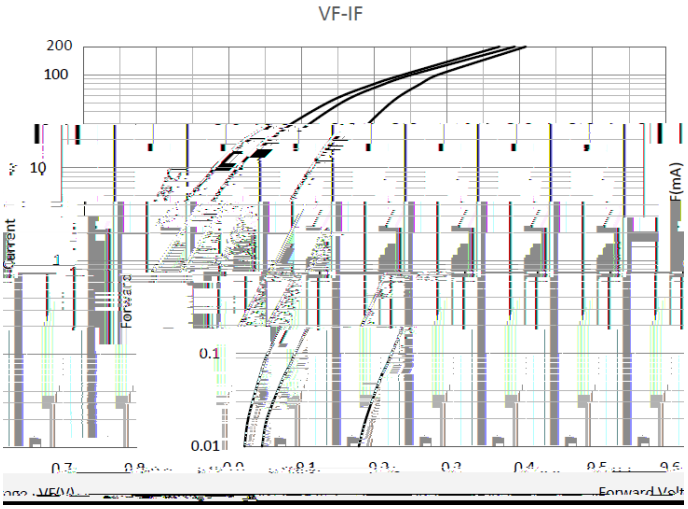
VF-IF
200
100
10
1
0.1
0.01

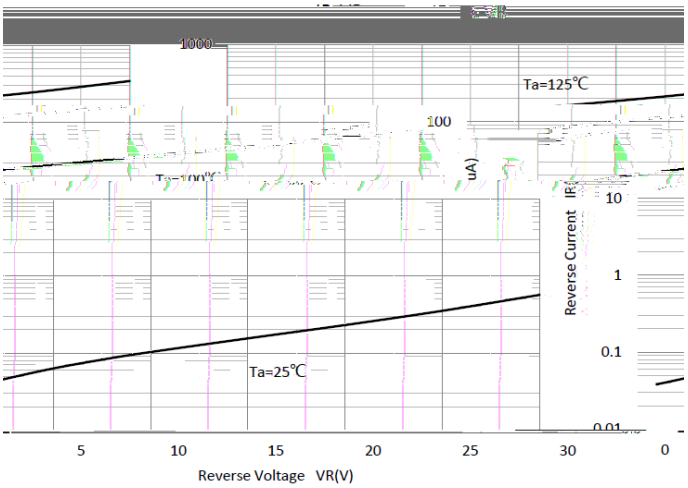
1000
100
10
1
0.1
Ta=125℃
Ta=25℃
Reverse Current
5
10
15
20
25
30
Reverse Voltage VR(V)

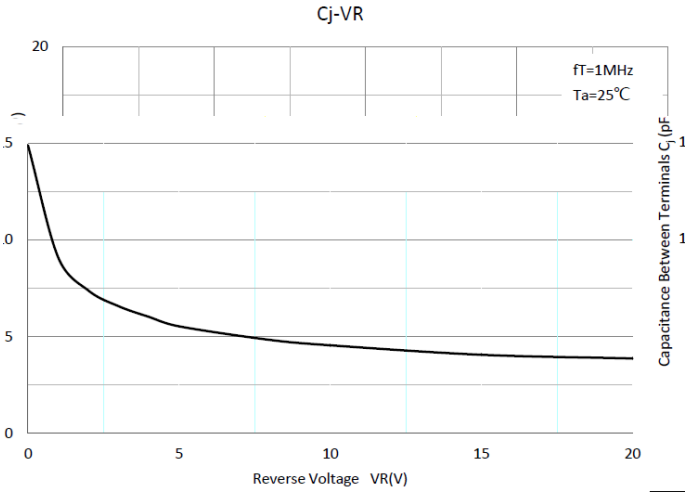
Cj-VR
20
fT=1MHz
Ta=25℃
0
5
10
15
20
Reverse Voltage VR(V)

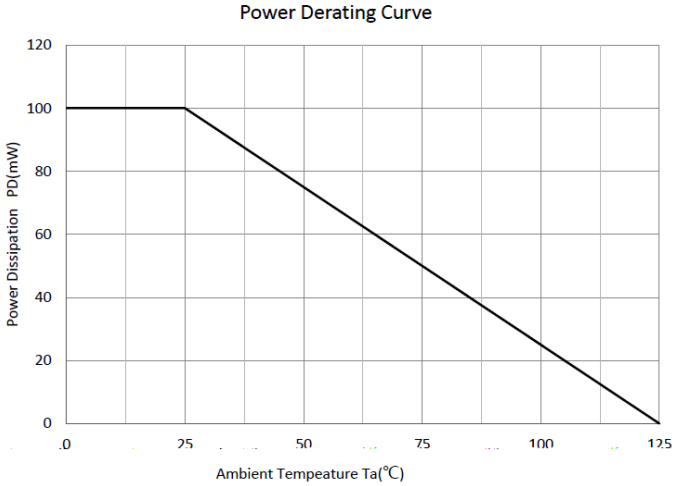
Power Derating Curve
120
100
80
60
40
20
0
Power Dissipation PD(mW)
25
50
75
100
125
Ambient Tempeature Ta(℃)

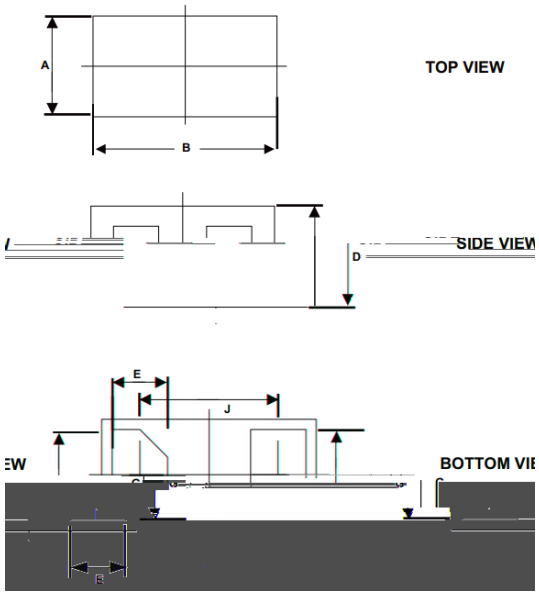
A
B
TOP VIEW
D
SIDE VIEW
E
J
BOTTOM VIE

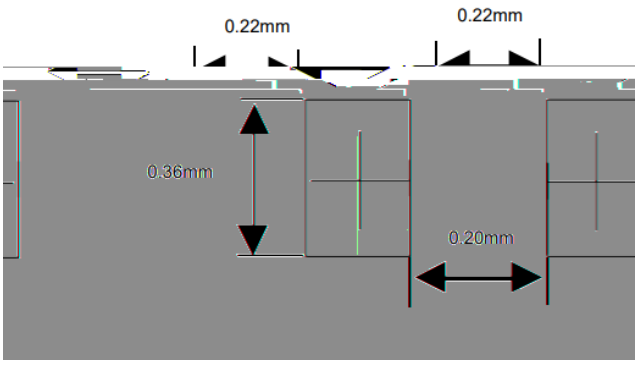
0.22mm
0.22mm
0.36mm
0.20mm