M F

Values

M F

Package Outline Information

CASE: F3

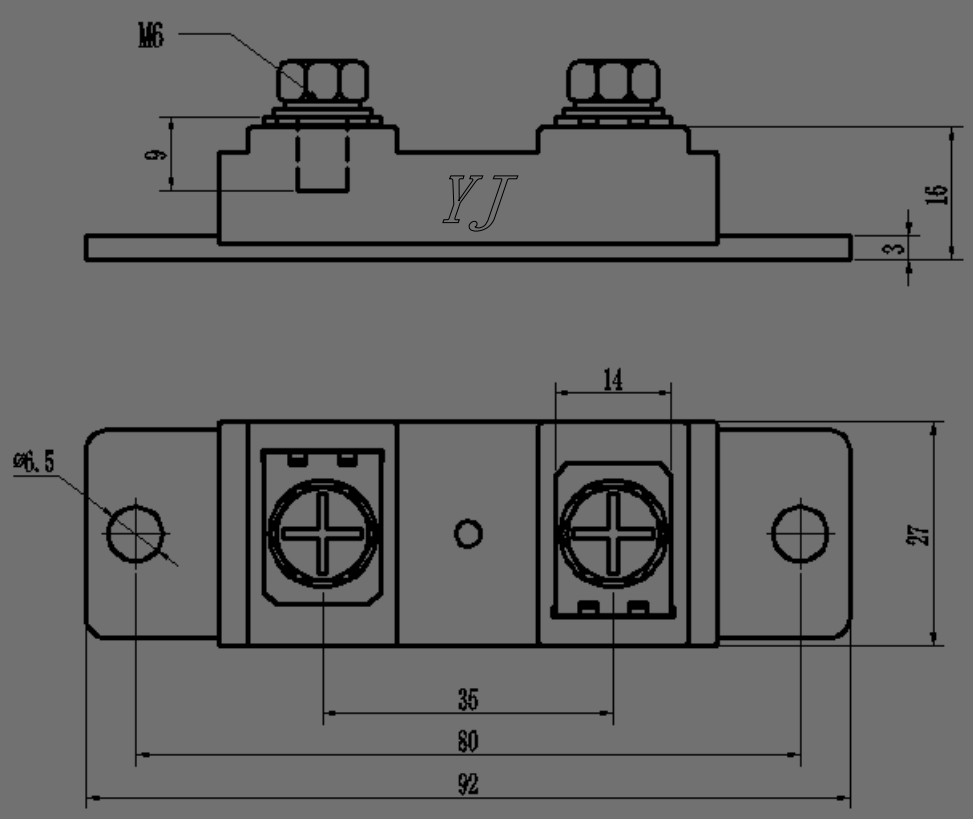

Dimensions in mm