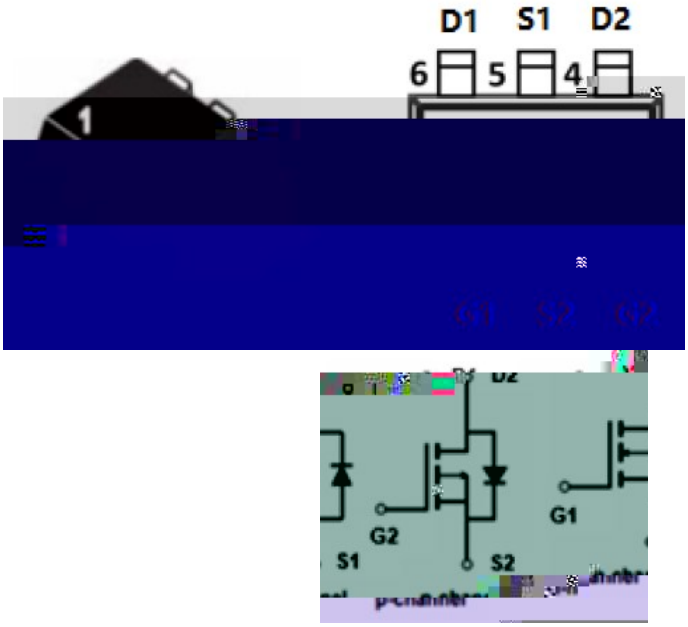
D1
S1
D2
6
5
4
1
G1
S2
G2

D2
G2
G1
S1
S2

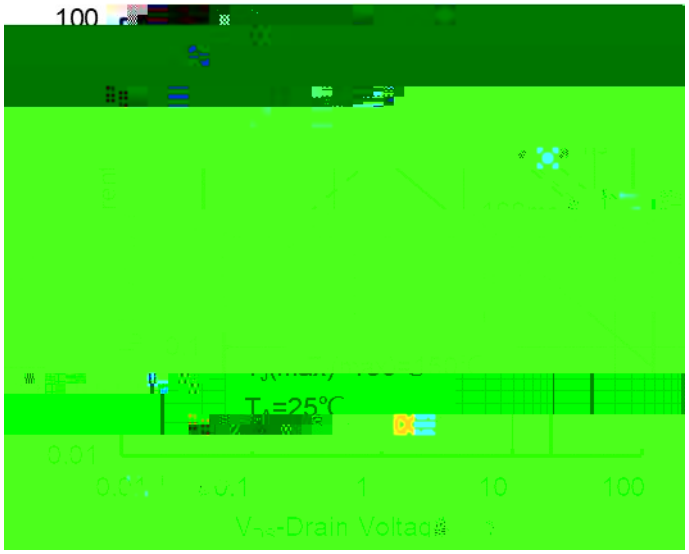
100
T_A=25°C
0.01
0.01
0.1
1
10
100
Drain Voltage

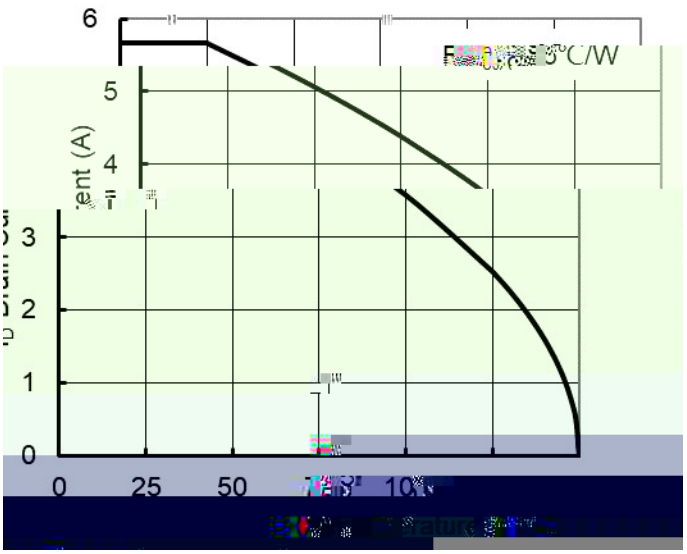
6
5
4
3
2
1
0
0
25
50
100

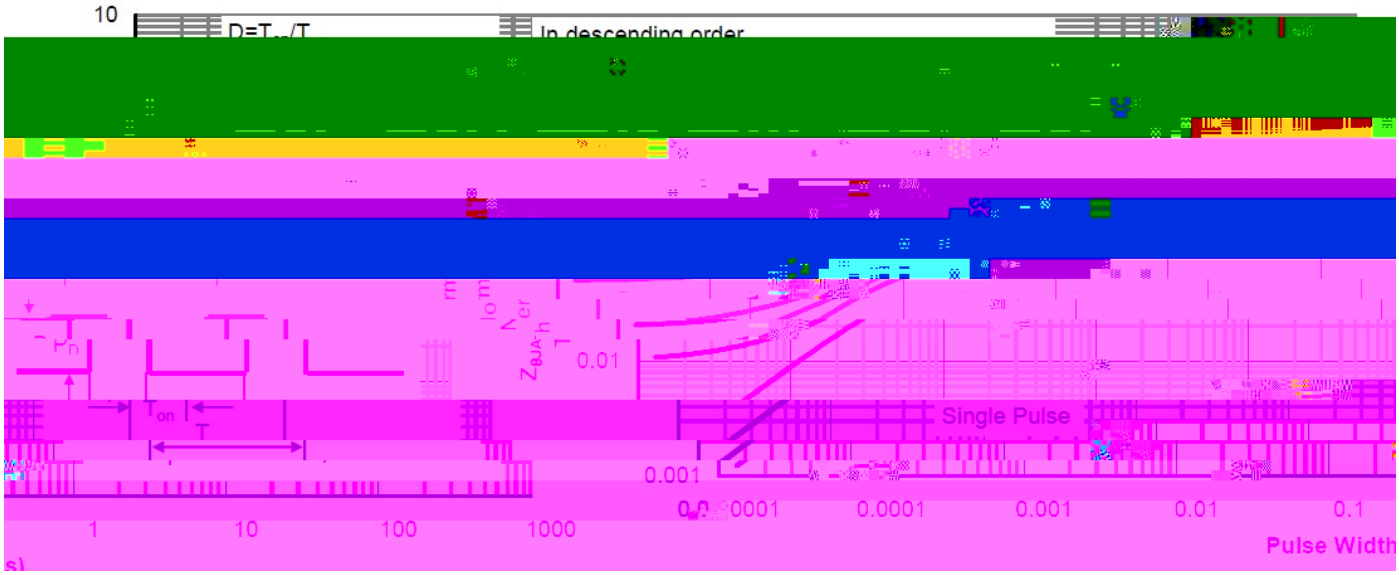
10
In descending order
T_{on}
T
0.01
Single Pulse
0.001
1
10
100
1000
0.0001
0.001
0.01
0.1
Pulse Width

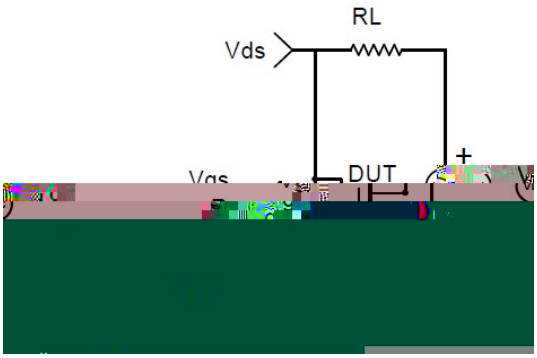
RL
Vds
DUT
+

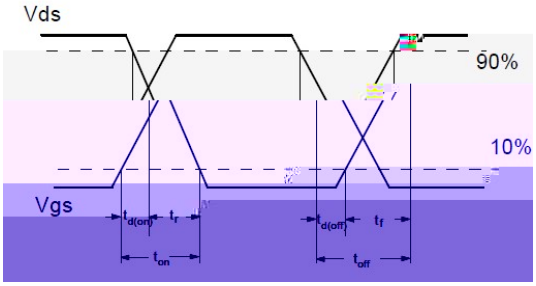
Vds
90%
10%
Vgs
$t_{d(on)}$
t_r
$t_{d(off)}$
t_f
t_{on}
t_{off}

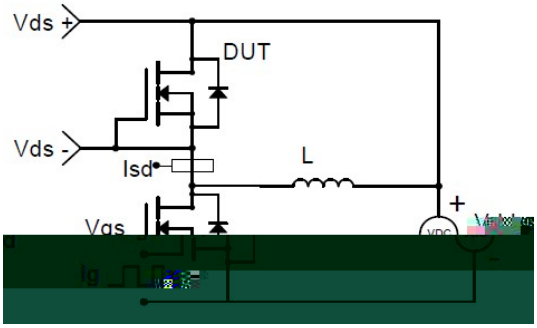
Vds +
DUT
Vds -
Isd
L
Vgs
+
VDC

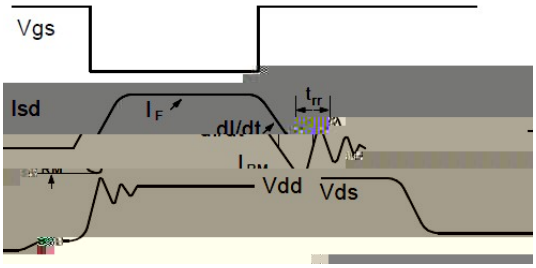
Vgs
Isd
I_F
t_{rr}
dI/dt
Vdd
Vds

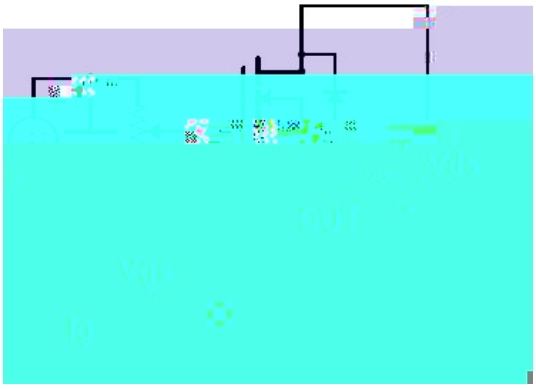

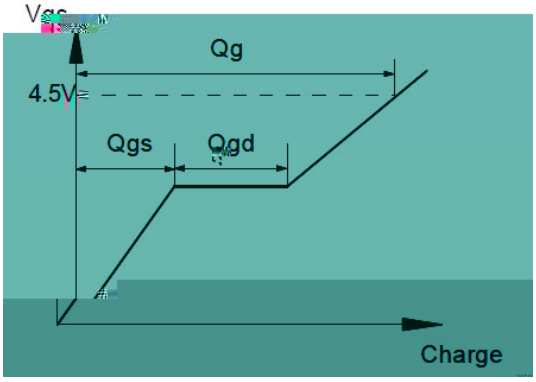
Qg
4.5V
Qgs
Qgd
Charge

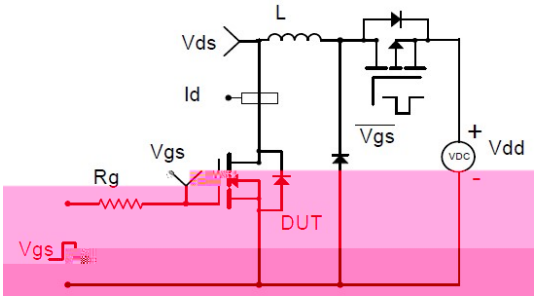
L
Vds
Id
Vgs
Rg
DUT
Vgs
+
VDC
Vdd
-

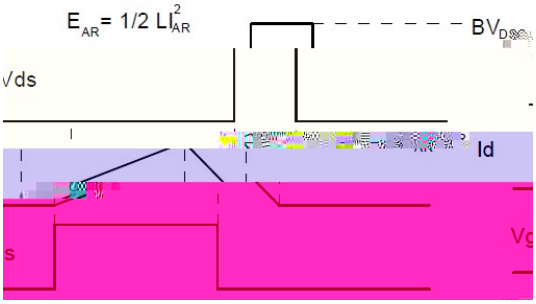
E_{AR}= 1/2 LI_{AR}^2
BV_{DSS}
Vds
Id

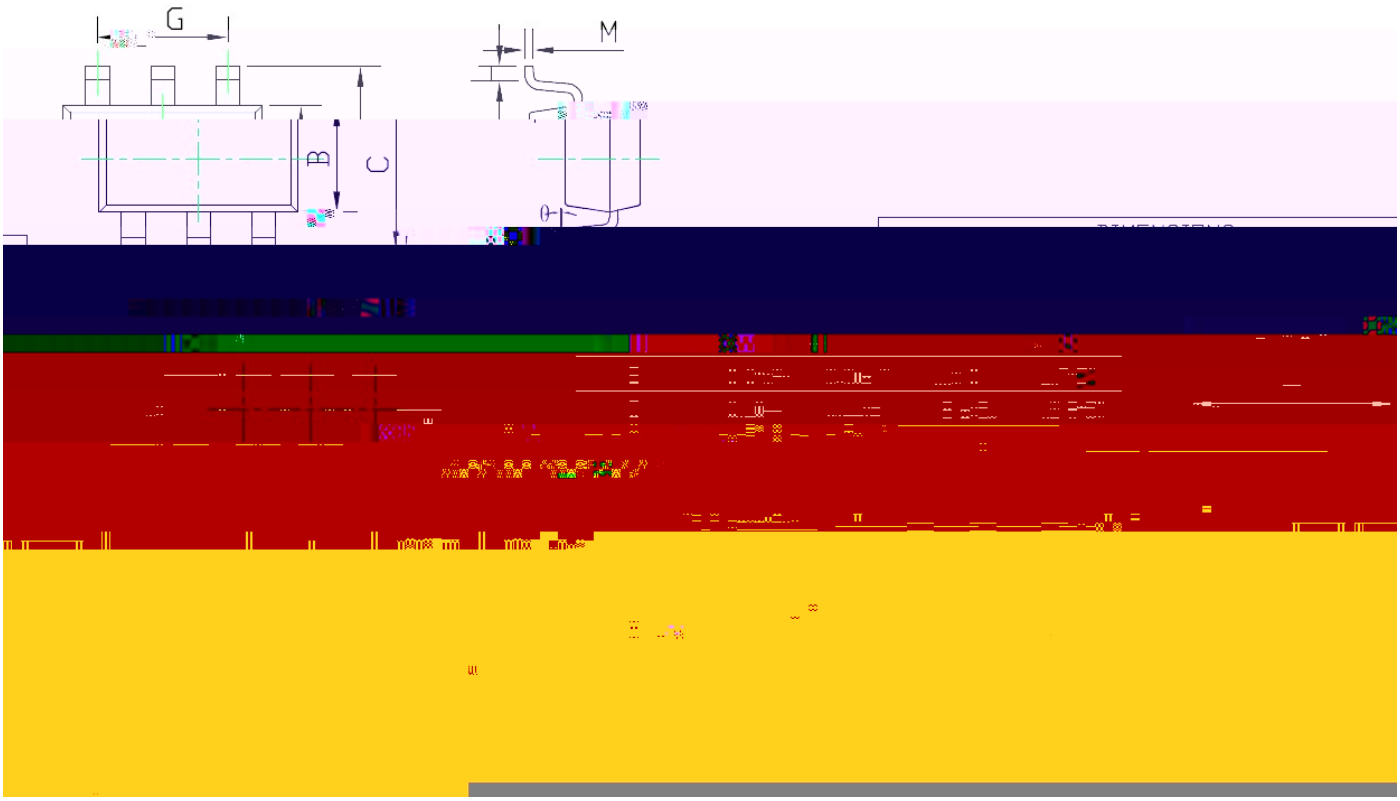
G
M
B
C