Schottky Diodes

Features

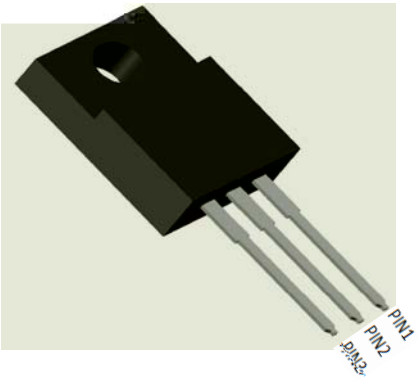

Terminals

Polarity

Maximum Ratings

PARAMETER	SYMBOL	UNIT	MBRU40100FCT

Electrical Characteristics

PARAMETER	SYMBOL	UNIT	TEST CONDITIONS	MBRU40100FCT
			I_{RRM2} $V_{RM} = V_{RRM}$ $T_a = 100$	

Outline Dimensions

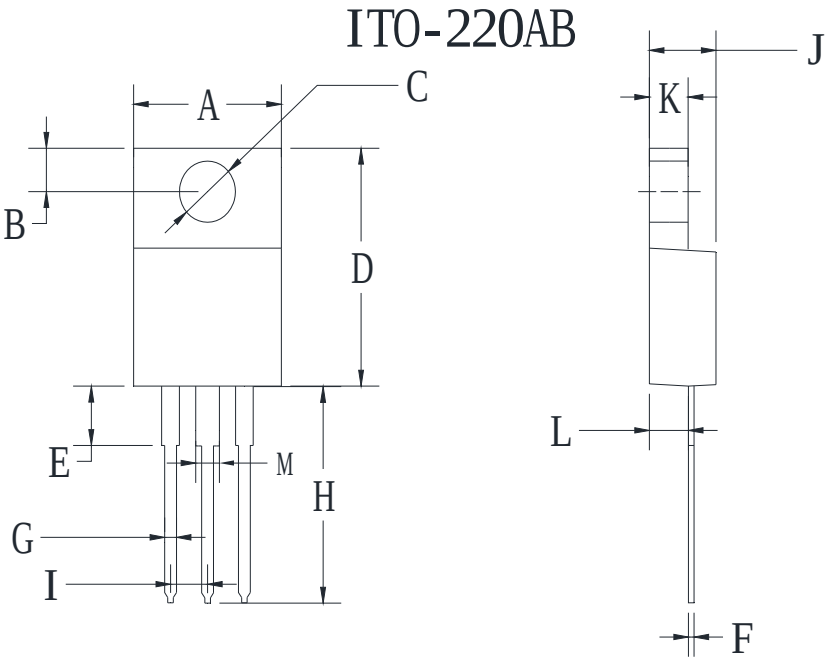

ITO-220AB		

Disclaimer